Series H

Dual - Oxygen Acetylene Hose Reels

Rugged, dependable and trouble free, these reels are designed for general shop use. They can be mounted wherever most convenient; on carts, walls, poles, or ceilings. They offer safety, easy mobility and maximum efficiency. A slight tug on the hoses releases the ratchet and the hoses are automatically retrieved onto the reel where they are out of the way, off the floor, and safe from accidental damage. Features include:

- **Rugged "H" frame design**
- **All steel construction**
- **Prelubricated ball bearings throughout**
- **Hose guide with rollers**
- **Baked polyester finish**
- **Full unimpeded gas flow**
- **Color coded swivels**
- **Holding ratchet**

Model H60 oxygen-acetylene reel. Hose guide with rollers is standard. Hose not included, but may be ordered from and installed by Gleason.

CATALOG NO.	REEL CAPACITY (Hose NOT included)*	DIM. "A"
H60-4-4-144524	60 feet 1/4" I.D. Twin Welding Hose, 2 Braid	7.64"
H62-4-4-144524	100 feet 1/4" I.D. Twin Welding Hose, 2 Braid	8.16"
H60-5-5-144524	60 feet 5/16" I.D. Twin Welding Hose, 2 Braid	7.64"
H62-5-5-144524	100 feet 5/16" I.D. Twin Welding Hose, 2 Braid	8.16"
H60-6-6-144524	60 feet 3/8" I.D. Twin Welding Hose, 2 Braid	7.64"
H62-6-6-144524	100 feet 3/8" I.D. Twin Welding Hose, 2 Braid	8.16"

*Hose may be ordered from Gleason and factory installed. Consult factory.

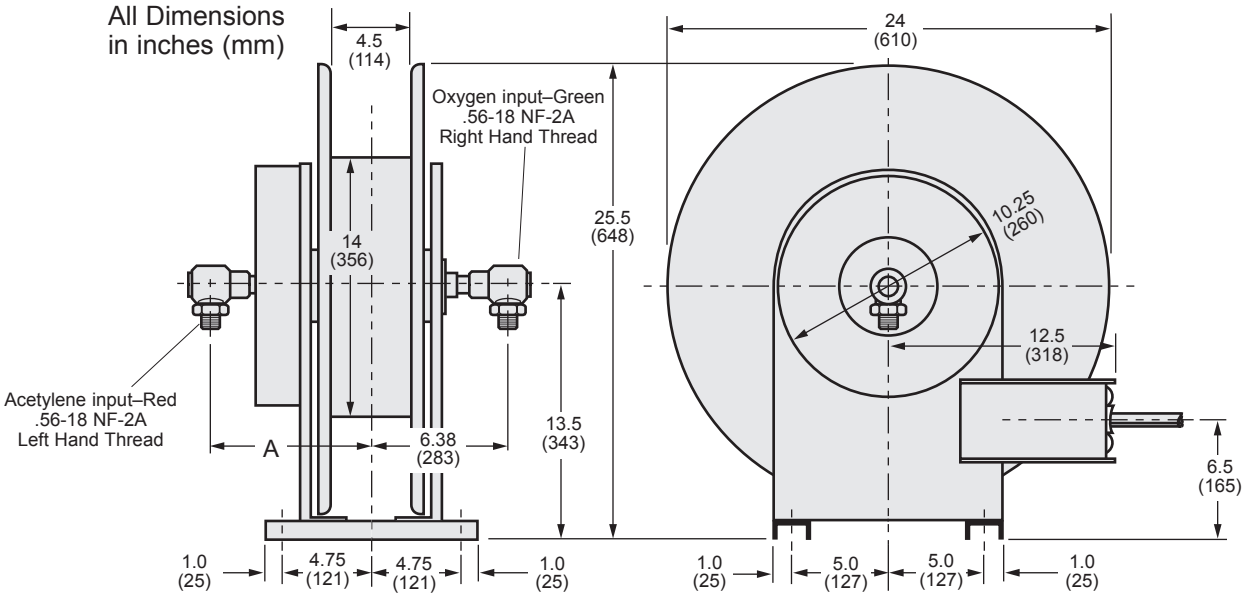

Spec Tech Industrial 203 Vest Ave. Valley Park, MO 63088 Phone: 888 SPECTECH
E-mail: sales@spectechind.com www.spectechind.com

Printed in USA

Bulletin No. DHOA-1